Assembly Instructions

Studio Easel

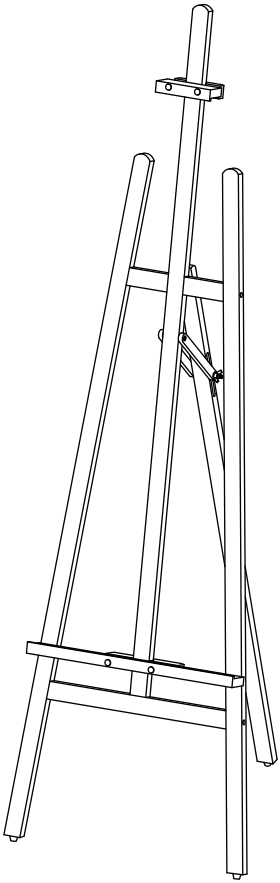

Important – Please read these instructions fully before assembly or use

Safety Information

Important – Please read these instructions fully before assembly or use

- Phillips head screwdriver required.
- Adult supervision suggested when assembling easel and when in use.
- Do not use easel on an uneven surface.
- Do not use easel if any part is broken or missing.

Components

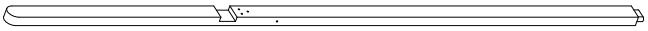

①1pc

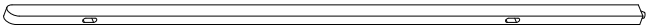

②2pcs

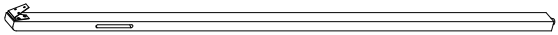

③1pc



④1pc

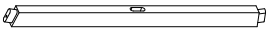

⑤1pc

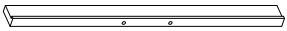

⑥1pc



⑦2pcs



⑧1pc



⑨2pcs

Hardware



Cx3pcs



Dx2pcs



Ax2pcs

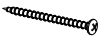

Bx4pcs



Ex1pc



Fx4pcs

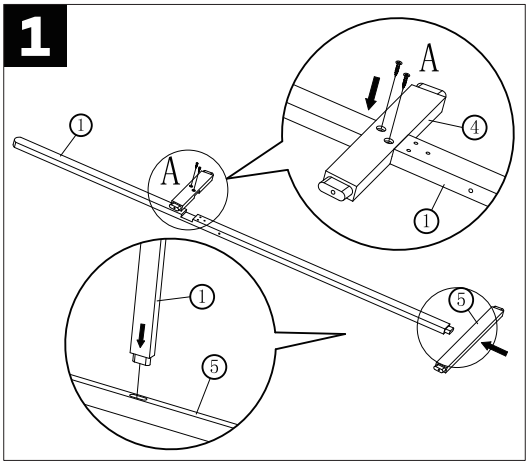
1
A
A
1
4
1
1
5
5

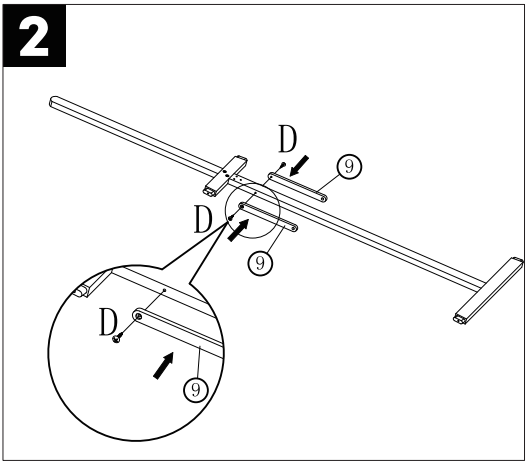
2
D
9
D
9
D
9

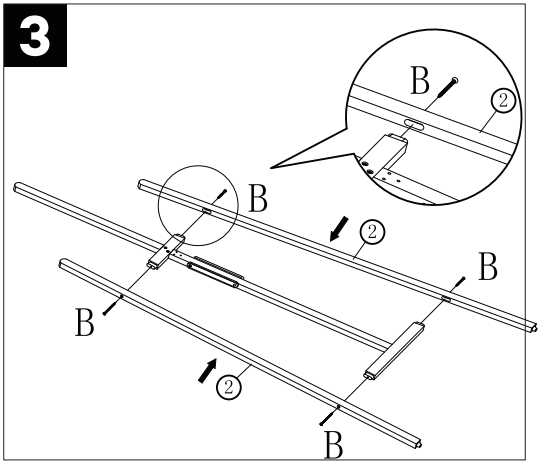
3
B
2
B
B
2
B
B
2
B

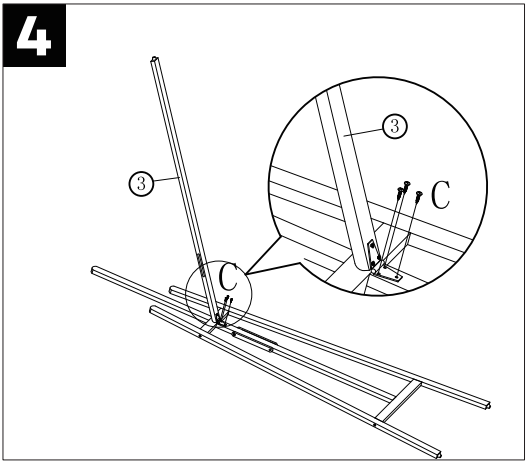
4
3
3
C
C

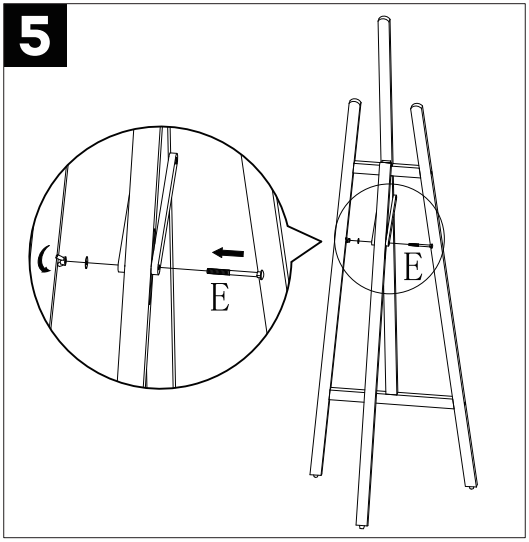
5
E
E

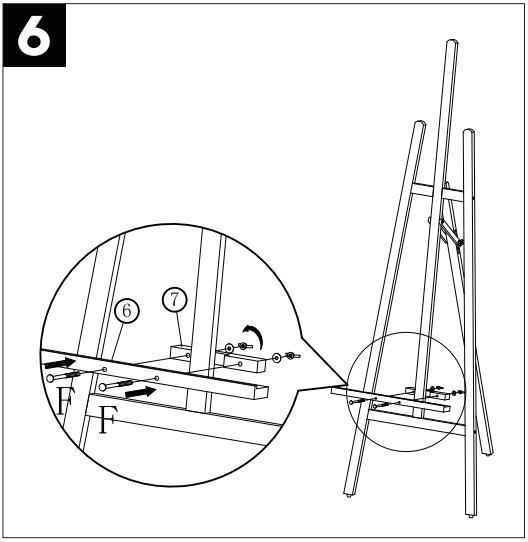
6
6
7
F
F

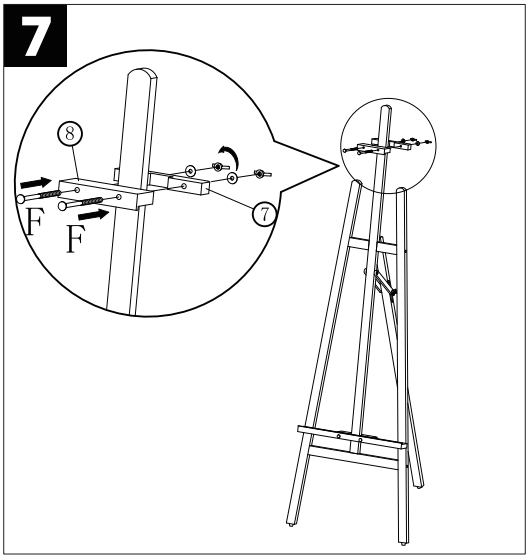



Care and Maintenance

- Easel is intended for indoor and display use only.
- Wipe clean with a slightly damp cloth.
- Store your easel in a cool and dry place.
- Allow air to circulate to avoid moisture and mould.
- Periodically check all fittings to ensure that none have come loose.
- Tighten loose fittings.